hönle group

hönle uv technology

LED

LED Spot 100 IC / LED Spot 100 HP IC
LED Spot 200 HP IC
& LED powerdrive IC

System features

- **Irradiation with more than** 5.000 mW/cm²
- Wavelengths: 365, 385, 395, 405 und 460 nm
- Irradiation area: 100 x 100 mm resp. 200 x 50 mm

Advantages

- Low temperature load
- Stackable without gap for larger areas
- IC (Integrated Controller) or Plug & Play with **LED powerdrive IC**

LED Spot 100 IC / 100 HP IC & LED Spot 200 HP IC

The solution for all applications which need a highly intensive UV irradiation on lager areas.

Your Benefit

- Homogeneous irradiation of the substrate due to a uniform light distribution for perfect curing results
- Process reliability thanks to the recognition of LED-malfunction and comprehensive monitoring functions
- A maximum of productivity as well as safe and reproducible quality in automated production lines
- Flexibility of use: Irradiation of different geometries by a modular stringing together of several LED Spots for homogenuous irradiation
- Suitable for any substrate due to different wavelengths

Application fields

- Bonding, fixing or encapsulating of components in the **sectors Electronics, Opticals or Medical Engineering**
- **Fluorescence simulation** for material testings, particle detection and optimizing AOI applications
- High-intensive UV irradiation in the **biochemical sector**

Advantages of LED Technology

- Low-maintenance due to typically more than **20.000 hours LED-lifetime**
- No warm-up phase, ready for **immediate operation**
- **No IR irradiation**, lowest temperature load for temperature-sensitive materials

Facts & Figures

Type	**LED Spot 100 IC / LED Spot 100 HP IC**	**LED Spot 200 HP IC**
Available wavelengths [nm], +/- 10 nm	365 | 385 | 395 | 405 | 460	365 | 385 | 395 | 405 | 460**
Typical intensities [mW/cm²]*	1.100 | 1.500 | 1.700 | 2.000 | 2.500**	
Typical intensities HP version [mW/cm²]*	2.200 | 3.000 | 3.500 | 4.000 | 5.000**	2.200 | 3.000 | 3.500 | 4.000 | 5.000**
Dimensions [mm] (B x T x H)	108 x 108 x 205	203 x 63 x 205
Light-emitting aperture in mm:	100 x 100	200 x 50
Interfaces	Digital PLC interface, BUS control via RS485	
Safety	Integrated Control (IC): monitoring functions including short-circuit, interruption, excess temperature and reading out of operation hours	
Cooling	air cooling (apt for continuous operation)	

* measured with LED-F3 /(LED-VIS-F1) ** surface sensor for UV-Meter

LED Spot 100 (HP) IC

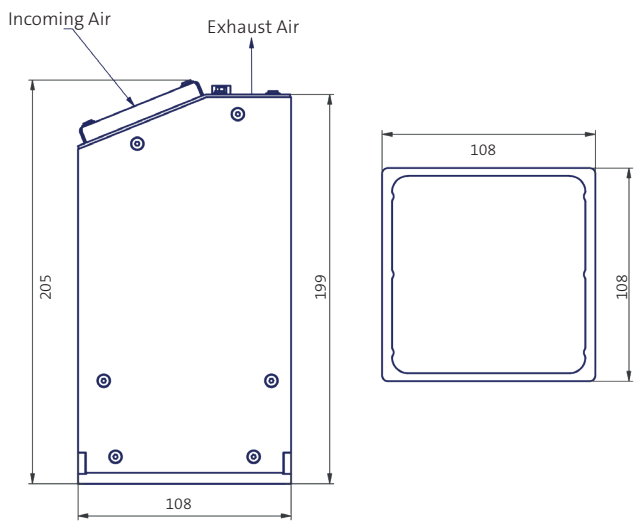

LED Spot 200 HP IC

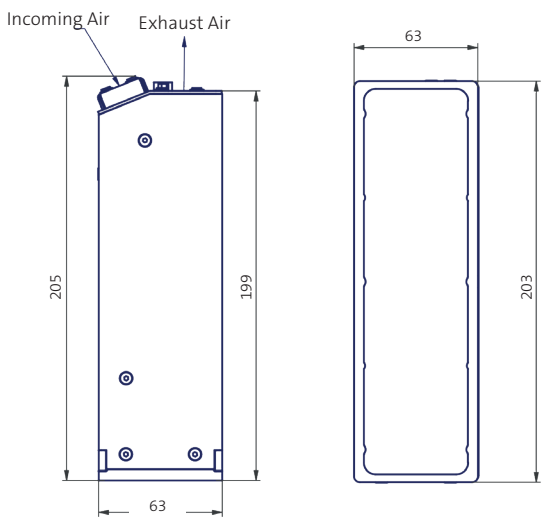

Control and Supply

Mains supply and control of all LED Spots IC are provided by the optionally available LED powerdrive IC or directly by customers‘ power supply and PLC.

Control and Supply via LED powerdrive IC

- **Plug&Play** solution
- Automatic recognition of the connected LED Spot
- For direct reading on the display **at one glance:** operation status, LED temperature, irradiation time
- **Electrical LED power** adjustable in 1%-steps from **10% to 100%**
- Comprehensive functions for monitoring, safety and stability of the process
- Available in various versions, **optionally with safety-related release according to performance level d**
- Further information and adjustments in the service menu

Userfriendly

- **Intuitive operation** on clearly arranged display
- **Operation panel** for a fast and guided adjustment of the main parameters: power and time
- Saving of the adjusted parameters due to **key-lock-function**

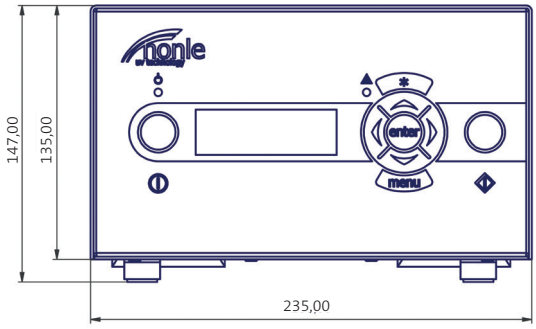

Front view

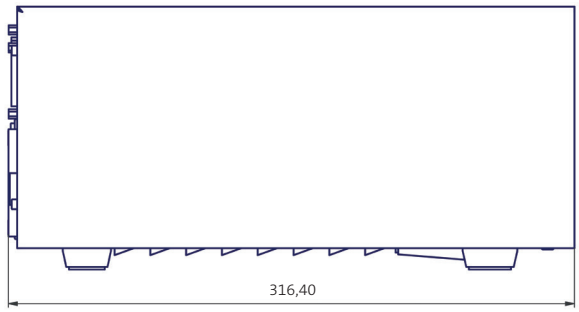

Side view

Control & Supply of the LED Spot IC	**LED powerdrive IC**	**Customer-specific**
	LED powerdrive 400 IC: for 1 LED Spot LED powerdrive 1200 IC: for up to 3 LED Spots	Supply via external power supply plus control of interface by the customer
Intensity regulation adjustable in [%]	10% - 100% (1%-steps) analog dimming via 0-10-V signal	
Adjustment of irradiation times	sequential from 0,01 to 9999 s suitable for continuous operation	
Interfaces	Digital PLC interface | RS-232	Control via SPS interface / RS-485
Cycle resp. reaction times [sec]	0,1 s	100 µs
Monitoring	Monitoring of LED segment relating temperature, short-circuit, malfunction, operation hours	Integrated control (IC) inside LED Spot
Safety	Safety-related release according to performance level d in HS version	-
Further options	Controllable via foot switch Adapter for operation with up to 3 foot switches	

Unique system competence for industrial bonding processes

Dr. Hönle AG offers a various range of **LED-UV and conventional UV systems** which lead to a complete curing of adhesives or sealants within only fractions of a second.

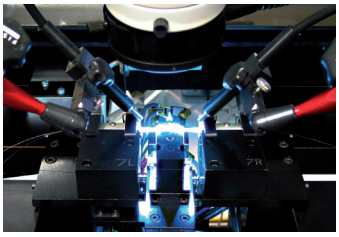

Contact for UV curing:
Email: uv@hoenle.de
Phone: +49 8105 2083-0

Perfectly matched: the **high-tech adhesives** of our subsidiary **Panacol** which are used for industrial bonding processes worldwide for example in key industries such as Electronics, Microelectronics, Optics, Medical Devices, Automotive and E-Mobility.

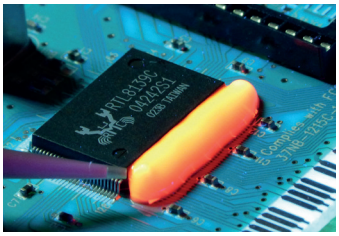

Contact for Adhesives:
Email: info@panacol.de
Phone: +49 6171 6202-0

More Hönle LED units (Examples)

Air cooled type **Water cooled type**

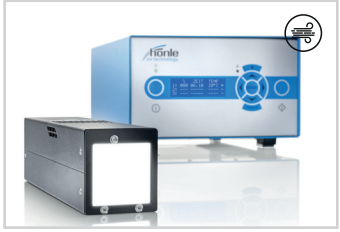

LED Spot 40 IC
compact flood unit with high intensities

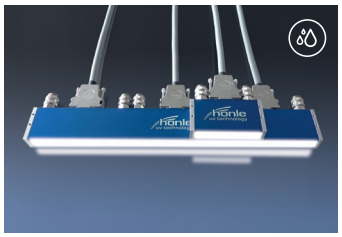

LED Powerline LC
length variable in 40-mm steps in the wavelengths 365/385/395/405 nm

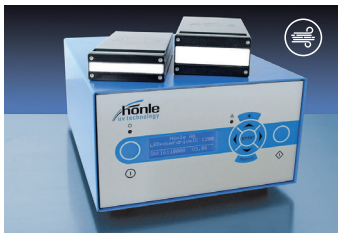

LED Powerline AC/IC
air cooled high-performance UV-LED array

bluepoint LED eco
a highly intensive UV-LED-point source

hönle uv technology
Head Office

Dr. Hönle AG UV Technology, Nicolaus-Otto-Str. 2, 82205 Gilching, Germany
Phone: +49 8105 2083-0, Fax: +49 8105 2083-148. **www.hoenle.com**